AV-289

LOUD AND CLEAR

Model Number: AV-289

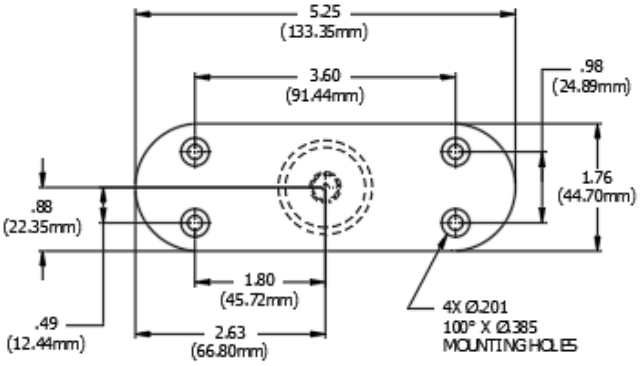

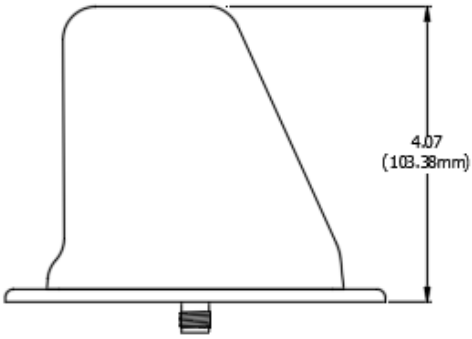

PRODUCT DESCRIPTION

The AV-289 is a broadband blade type antenna for applications such as Transponder, Cellular, 4G, GSM, PCS, WIFI and UMTS, however, it is FAA Qualified as a Transponder antenna. The antenna housing is constructed of a Polyarylamide Plastic shell and the base is 6061-T6 aluminum with a chemical conversion coating per MIL-C-5541. The antenna is supplied with an o-ring and mounting hardware. The antenna is designed to operate at speeds up to Mach 1 and altitudes up to 55,000 feet.

PRODUCT SPECIFICATIONS

Application	Transponder, Cellular, 4G, GSM, PCS, WIFI and UMTS	
Frequency	700-799 MHz (Non TSO Function) 800-849 MHz (Non TSO Function) 850-1029 MHz (Non TSO Function) 1030-1090 MHz (TSO C74d) 1091-2700 MHz (Non TSO Function)	
Impedance	50 Ohms Nominal	
VSWR	700-799 MHz 800-849 MHz 850-1029 MHZ 1030-1090 MHz 1091-2700 MHz	2.8 Max. 2.2 Max. 2.0 Max. 1.5 Max. 2.0 Max.
Polarization	Vertical	
Pattern	Omni-Directional	
Connector	“TNC” Female (Optional: SMA)	
RF Power Handling	100 Watts Continuous, 1000 Watts Peak	
Gain on 4 ft. Round Ground Plane	4 dBi Nominal	
Gain on 2 ft. Round Ground Plane	3.5 dBi Nominal	
Max. Weight	0.60 lbs (0.273 kg)	
Color	Gloss White, Skydrol resistant polyurethane enamel	

P/N: AV-289	“TNC” Female Connector
P/N: AV-289(-SMA)	“SMA” Female Connector
P/N: AV-289(-BNC)	“BNC” Female Connector
P/N: AV-289(-N)	“N” Female Connector